Middleby Marshall®

PS638 Electric or Gas Conveyor Oven

Distributor:

chef's hat
Where the chefs shop

Chefs Hat Australia Pty. Ltd
131 Cecil St
South Melbourne,VIC 3205

p: +61 3 9682 1441
e: sales@chefshat.com.au



WOW! OVEN

PRINCIPLE

The Middleby Marshall WOW! conveyor series oven utilizestechnology that allows the user full control of the airflow in the baking chamber, resulting in optimal results in cooking product. Air flow is modified through the main control, allowing instant results and full control of air movement, time, and temperature settings. The exterior of the oven is cool to the touch, safely giving users cooler working conditions in the immediate area. The WOW! oven is designed to cook an endless amount of food products including pizza, chicken, seafood, sandwiches and more.

STANDARD FEATURES

- Impingement PLUS! low oven profile and dual air return
- Reduces energy consumption and increases cooking efficiency
- 38” (965 mm) long baking chamber
- 26” (660 mm) wide, 65.25”(1657 mm) long conveyor belt
- Removable parts for easy cleaning (crumb pans, end panels, air fingers, and a folding conveyor belt assembly)
- Control compartment is designed for quick and easy access
- Advanced technology air delivery system bakes up to 30% faster than standard conveyor ovens
- For installation under a ventilation hood only
- One-year parts and labor warranty

ENERGY MANAGEMENT SYSTEM (EMS)

- The PS638 WOW!™ oven features a patented Energy Management System (EMS) that automatically reduces energy consumption. Touch Screen Control can be programmed in one energy saving mode.
- Automatic “energy eye” saves energy when no pizzas are in the oven.

CERTIFICATIONS

C ETL LISTED US Intertek

ETL SANITATION LISTED Intertek

CE

OPTIONAL FEATURES

- Split belt – two 12” (305mm) belts with individually adjustable speed settings

DOC-1007/Revision B/March 2021

Middleby Marshall®

PS638 Electric or Gas Conveyor Oven

GENERAL SPECIFICATIONS

Wall Clearance		
Rear of Conveyor to Wall	0”	0 mm
Control End to Wall	0”	0 mm
Non-control End to Wall	0”	0 mm
Bake Operating Temperature	325°F-600°F	163°C-315°C
Time Range	30 seconds - 13 minutes	

DIMENSIONS

Single Units		
Heating Zone	38”	965 mm
Baking Area	6.8 sq ft²	0.63 sq m
Belt Length	65.25”	1657 mm
Overall Length	65.25”	1657 mm
Height (22.13”/562 mm legs)*	41.9”	1064 mm
Depth	49.23”	1250 mm
Ship Weight	820 lb.	372 kg
Ship Cube	115 ft³	3.24 m³
Double Stacked Units		
Heating Zone	76”	1930 mm
Baking Area	13.6 sq ft²	1.26 m²
Belt Length	65.25”	1657 mm
Overall Length	65.25”	1657 mm
Height (11.25”/286 mm legs)*	51.23”	1301 mm
Depth	49.23”	1250 mm
Ship Weight	1640 lb.	744 kg
Ship Cube	230 ft³	6.5 m³
Triple Stacked Units		
Heating Zone	114”	2896 mm
Baking Area	20.4 ft²	1.9 sq m²
Belt Length	65.25”	1657 mm
Overall Length	65.25”	1657 mm
Height (5”/127 mm casters)*	63.47”	1612 mm
Depth	49.23”	1250 mm
Ship Weight	2460 lb.	1116 kg
Ship Cube	345 ft³	9.8 m³

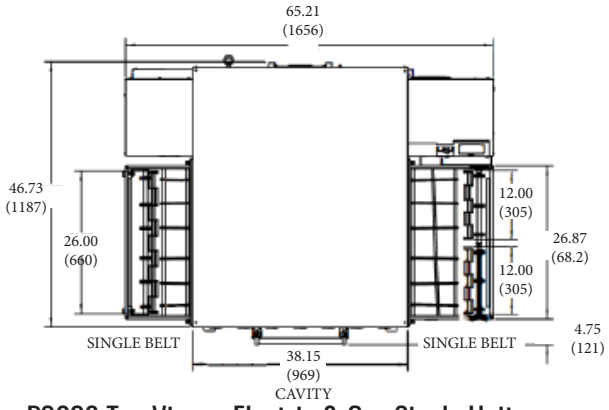

PS638 Top View – Electric & Gas Single Unit

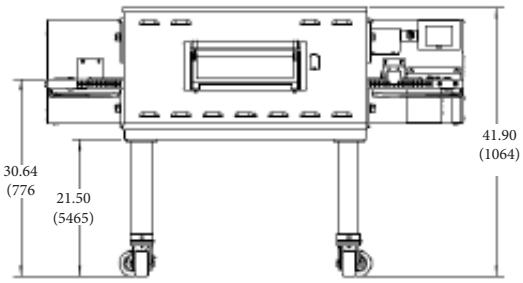

PS638 Front View – Electric & Gas Single Unit

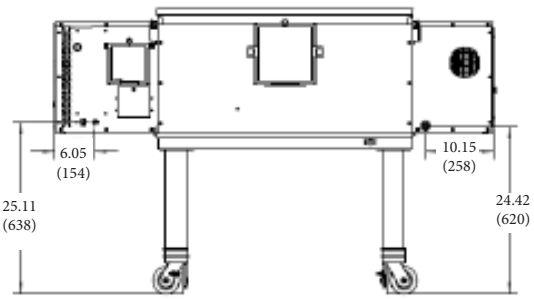

PS638 Back View – Electric & Gas Single Unit

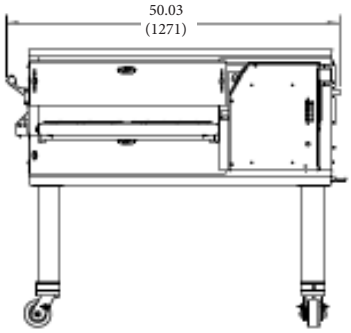

PS638 Side View – Electric & Gas Single Unit

* Height dimensions are shown for standard leg extensions. Customer-specific leg extensions will affect these dimensions. All units are shown with casters. CE-approved ovens use 6” (152 mm) adjustable feet instead of casters.

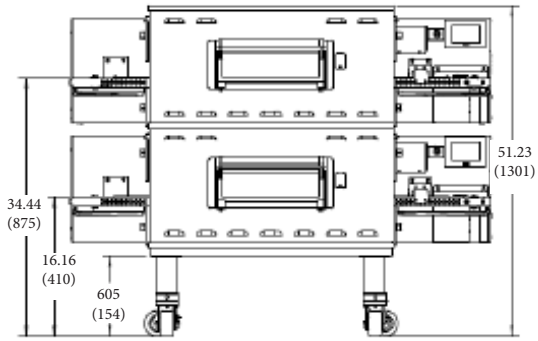

PS638 Front View – Electric & Gas Double Stacked w/Legs

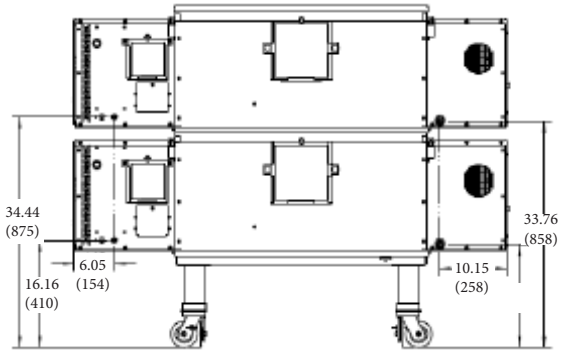

PS638 Back View – Electric & Gas Double Stacked w/Legs

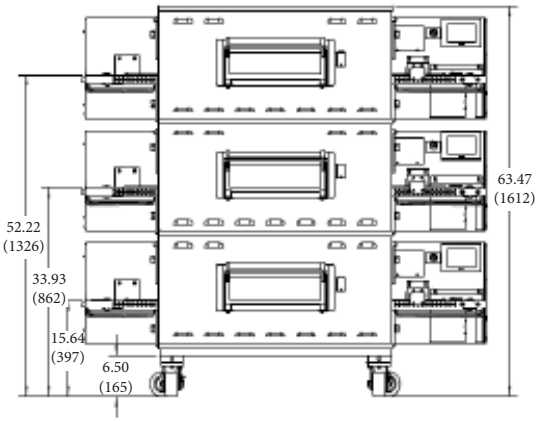

PS638 Front View – Electric & Gas Triple Stacked w/Legs

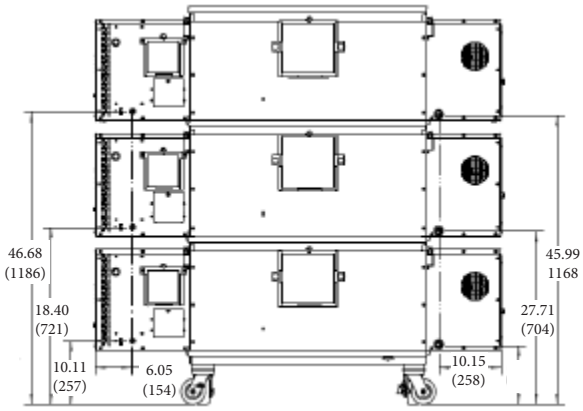

PS638 Back View – Electric & Gas Triple Stacked w/Legs

Middleby Marshall®

PS638 Electric or Gas Conveyor Oven

PS638E Electric Conveyor Oven

VOLTAGE	PHASE	FREQUENCY	RATED HEAT INPUT	AMPERAGE*				SUPPLY	BREAKERS
				L1	L2	L3	N		
208 V	3	50/60 Hz	22 kW	63	63	60	-	3 pole 4 wire (3L + G)	As per local code
240 V	3	50/60 Hz	22 kW	54	54	51	-	3 pole 4 wire (3L + G)	As per local code
380 V	3	50/60 Hz	20.25 kW	38	33	33	6.7	4 pole 5 wire (3L + N + G)	As per local code

* Overall height is shown for standard leg extensions. Customer-specific leg extensions will affect the overall height of the ove
* The current draw rating shown above are maximum values for normal operation, amperage draw will be less than the listed value.

NOTE: Each oven includes a 6 ft cord with NEMA# L6-20P plug. Customer to provide NEMA# L6-20R receptacle.

PS638G Gas Conveyor Oven

ELECTRICAL SPECIFICATIONS		
	USA & STD Export	Europe (CE)
Voltage	208/240 V	220-230 V
Phase	1	1
Frequency	50/60 Hz	50/60 Hz
Current Draw**	4.5 Amp-Run 10Amp-Start	4.5 Amp-Run 10Amp-Start
Supply	3 wire (2 hot, 1 ground)	3 wire (2 hot, 1 ground)
Breakers	As per local code	As per local code
Cord/Plug	Optional 6 ft cord with NEMA# 15-50P plug for 208-240V 3ph ovens. Customer to provide NEMA# 15-50R receptacle.	

NATURAL GAS SPECIFICATIONS	
Supply (Inlet) Pressure	6-8” W.C. (14.9-19.9mbar) *
Regulated Pressure	3.5” W.C. (8.7mbar)
Rated Heat Input	89,000 BTU (26.1 kW)

PROPANE GAS SPECIFICATIONS	
Supply (Inlet) Pressure	11-14 ”W.C. 27.4-34.9 mbar) *
Regulated Pressure	6” W.C. (14.9 mbar)
Rated Heat Input	89,000 BTU (26.1 kW)

* The required gas supply pressures of other locations are dependent on the local gas type and on all applicable local codes.

Minimum Gas Pipe Sizes:

* Natural Gas - 1 1/2” (50.8 mm) main supply line. One 3/4” (19mm) NP branch per oven cavity with individual full-flow shutoff valve.

* Propane Gas - 1 1/2” (31.8 mm) main supply line. One 3/4” (19mm) NP branch per oven cavity with individual full-flow shutoff valve NOTE: Each oven includes (1) 3/4”(19mm)NPT x 48”(1219mm).

Flexible, vinyl coated stainless steel braided gas hose.