ESWOOD
Professional Warewash



Smartwash

Professional Undercounter Warewasher

SW400

Professional Undercounter Warewasher



Smartwash

Undercounter Warewasher

The New Smartwash Range of undercounter warewasher is the first attractive, intelligent, one touch warewashing system in Australia that offers incredibly sustainable results in water and energy consumption.

This professional warewasher offers the first one touch control panel with digital wash and rinse temperature displays for easy HACCP recording for accurate food safety reporting. These machines are sleek and compact because we know space is of the essence and presentation is key.

Only Smartwash offers you a warewasher with one touch control, drain pump fitted as standard, a self cleaning cycle and 3 wash cycle options, offering you an economical and sustainable solution for your business.

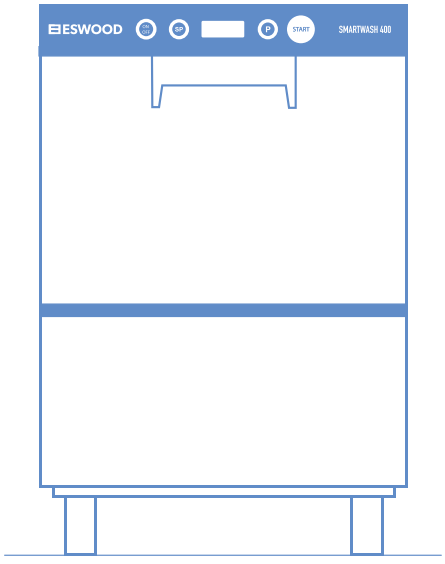

ESWOOD

eswood.com.au

211–217 Woodpark Road SMITHFIELD NSW 2164
T: 1800 013 123
E: sales@middleby.com.au



- Up to 1200 glasses per hour. Compartmented racks available to suit tall stem glasses
- User friendly TOUCH control panel with digital wash and rinse temperature displays for easy HACCP recording
- Water saving – uses only 1.9 litres per cycle
- Three wash cycles of 60, 90 & 120 seconds
- Built-in detergent and rinse aid pump fitted as standard
- Self cleaning cycle, easily removable spray arms & filters together with a pressed wash tank
- Double skinned door drastically reduces heat & sound emissions
- Self-Diagnostic system for accurate fault finding & reduced ownership costs
- Thermostop Function to ensure set rinse temperature is achieved
- 4 x 150mm legs included (optional use)

ESWOOD

eswood.com.au
211–217 Woodpark Road SMITHFIELD NSW 2164
T: 1800 013 123
E: sales@middleby.com.au

A. Drain Connection 20mm ID Hose
B. Water Connection 3/4" x 1.5 Braided Hose
C. Electrical Connection 2m 15A Plug

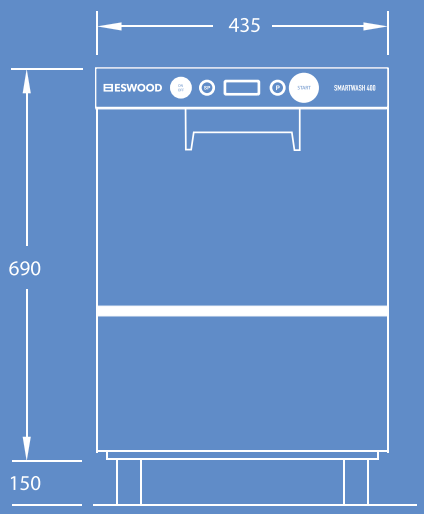

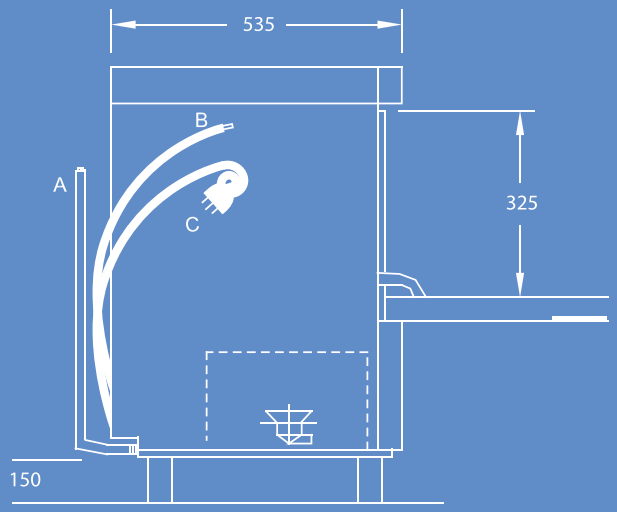

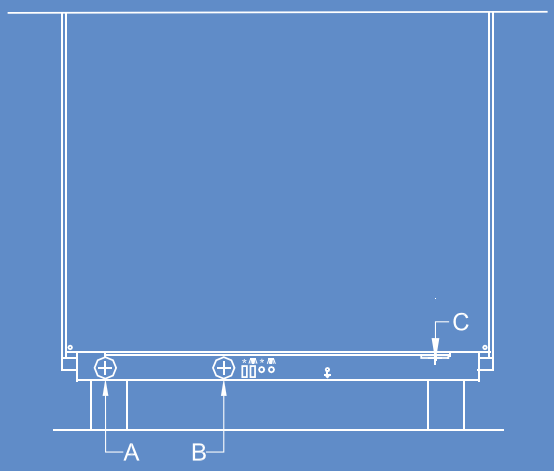

SW400

Professional Undercounter Warewasher

Utilises 400 x 400mm Dish/Cup rack
or 17" x 14" & 14" x 14" Glass rack

SW400 Specifications

DIMENSIONS (WxDxH)	435 x 535 x 690mm
DOOR ENTRY	325mm
RACK SIZE (WxD)	400 x 400mm or 14" x 17" or 14" x 14"
ELECTRIC CONNECTION	240V / 50Hz / 1 Phase
RATING	3.5 kW
WATER SUPPLY	65°C / 2-4 bar (28-58 psi)
SELF CLEANING CYCLE	YES
WASH CYCLE	60 / 90 / 120 sec
WATER CONSUMPTION	Approx. 1.9L per cycle
DOOR CONSTRUCTION	Double-Skinned
WASH / RINSE ARMS	Hydrodynamic Parallel
CONTROL PANEL	Advanced Electronic Soft-Pad
TEMPERATURE GAUGE	Fitted
SELF-DIAGNOSTIC SYSTEM	Fitted
RINSE-AID & DETERGENT PUMP	Fitted
DRAIN PUMP	Fitted
THERMOSTOP, TANK STRAINERS	Fitted
WATERMARK APPROVAL	WMKT25317
HACCP APPROVAL	PE-388-GE-09

Dimensions may change without notice in accordance with product development and design

Distributor:

chef's hat
Where the chefs shop

Chefs Hat Australia Pty. Ltd
131 Cecil St
South Melbourne,VIC 3205

p: +61 3 9682 1441
e: sales@chefshat.com.au

eswood.com.au
211–217 Woodpark Road SMITHFIELD NSW 2164
T: 1800 013 123
E: sales@middleby.com.au

ESWOOD

MIDDLEBY AUSTRALIA